MKE 600

Shotgun Microphone

PDF export of the original HTML manual

Contents

1. Preface 3
2. Product information 4
    Accessories 5
3. Instruction manual 7
    Product overview 7
    Installation 8
    Operation 12
    Cleaning and maintenance 13
4. Specifications 14

1. Preface

PDF Export of the Original HTML Manual

This PDF document is an automatic export of an interactive set of HTML manuals. Some content and interactive elements may not be included in the PDF because they cannot be displayed in this format. In addition, automatically generated page breaks may cause related content to be slightly shifted. We can therefore only guarantee the completeness of the information in the HTML manual and recommend using it. You can find it in the Documentation Portal at www.sennheiser.com/documentation.

2. Product information

All information about the product and available accessories at a glance.

Art. no. 505453

Delivery includes

- MKE 600 shotgun microphone
- MZS 600 shock mount
- MZW 600 foam windshield
- KA 600 adapter cable
- Pouch
- Quick guide
- Safety guide

Short description

The MKE 600 is the ideal video camera/camcorder microphone able to handle even demanding filmic challenges. Due to its high directivity, the MKE 600 picks up sounds coming from the direction in which the camera is pointing and effectively attenuates noise coming from the sides and rear. The switchable “Low Cut” filter additionally minimizes wind noise.

Because some video cameras/camcorders do not provide phantom power, the MKE 600 can also be battery powered. A battery on/off switch prevents the battery from discharging prematurely; “Low Batt” is displayed.

Features

- Pronounced directivity
- Maximal rejection of side noise
- Switchable “Low Cut” filter minimizes wind noise
- Phantom or battery powering
- Battery switch with “Low Batt” indicator

- Rugged all-metal housing
- Very good suppression of structure-borne noise
- Supplied with foam windshield, shockmount and adapter cable for cameras with 3.5 mm jack connection

i You can find more detailed information about the MKE 600 in the following sections:

- Instruction manual
- Specifications

Accessories

Various accessory parts are available for the microphone.

Microphone clamp

MZQ 600 | Art. no. 505571

Foam windshield

MZW 600 | Art. no. 505569

Fur windshield

MZH 600 | Art. no. 505454

Connection cable

KA 600i | Art. no. 505799

For mobile devices with 3.5 mm TRRS jack connection

3. Instruction manual

Starting up and operating the microphone MKE 600.

Product overview

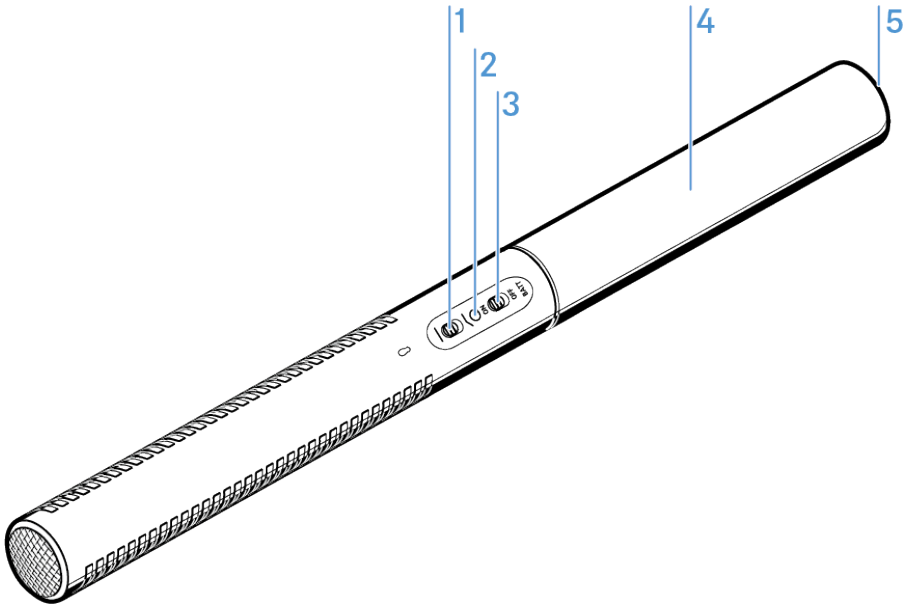

1 Low Cut switch

see Operation

2 LED operation indicator

see Operation

3 BATT ON/OFF battery switch

see Installation

see Operation

4 Cover for battery compartment

see Installation

5 XLR-3 socket (male)

see Installation

Installation

The MKE 600 offers a choice of phantom powering via the XLR connection or internal battery powering.

To use the microphone with phantom powering:

- Connect the XLR-3 socket (female) of the microphone cable to the XLR-3 socket (male) of the microphone.
- Connect the connector of the microphone cable to the video camera/camcorder or recording device.

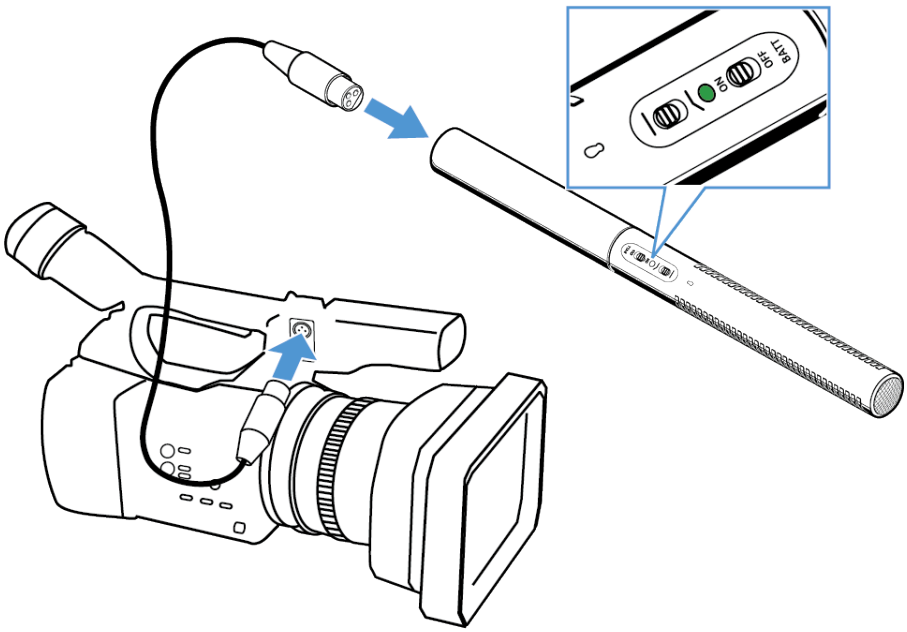

✓ The LED is green: phantom powering is switched on; the microphone is operational.

> **i** If phantom powered via the XLR connection, the microphone is continuously in operation (the **BATT ON/OFF** battery switch has no function).

To use the microphone with a battery:

- Unscrew the lower part of the microphone body by turning it in the direction of the arrow.
- Insert a battery/rechargeable battery (AA size, 1.5 V/1.2 V). Observe correct polarity when inserting the battery.

- Screw the lower part of the microphone body back to the microphone by turning it in the direction of the arrow.

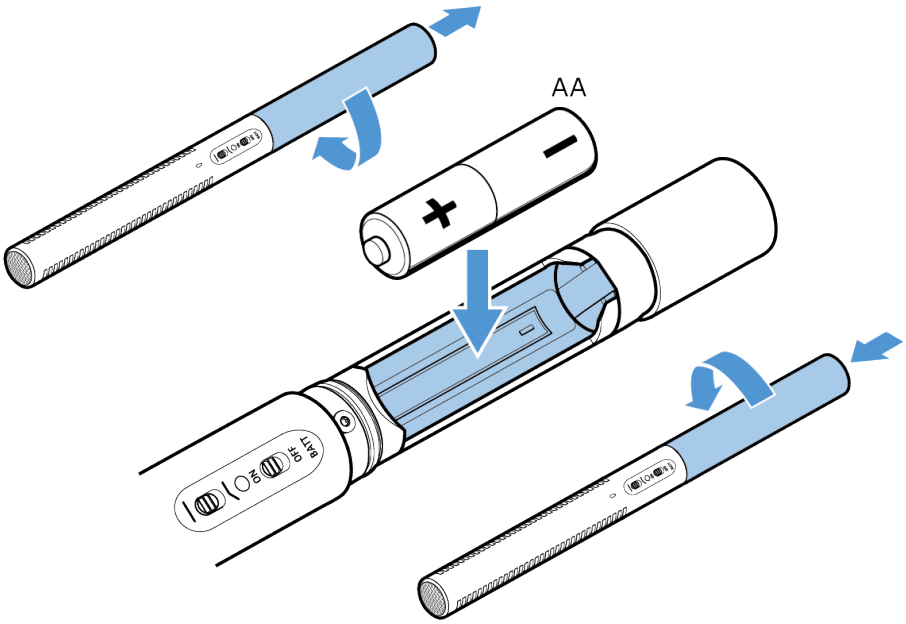

- Set the battery switch to **ON** to switch the internal battery on or set the battery switch to **OFF** to switch the battery power off.
  - The LED shows the operation status, see Meaning of the LED.

> **i** When not using the microphone for extended periods of time, remove the battery to prevent self-discharge.

To use the microphone with a camera:

- Connect the XLR-3 socket (female) of the microphone cable to the XLR-3 plug (male) of the microphone.
- Connect the plug of the microphone cable to the camera.

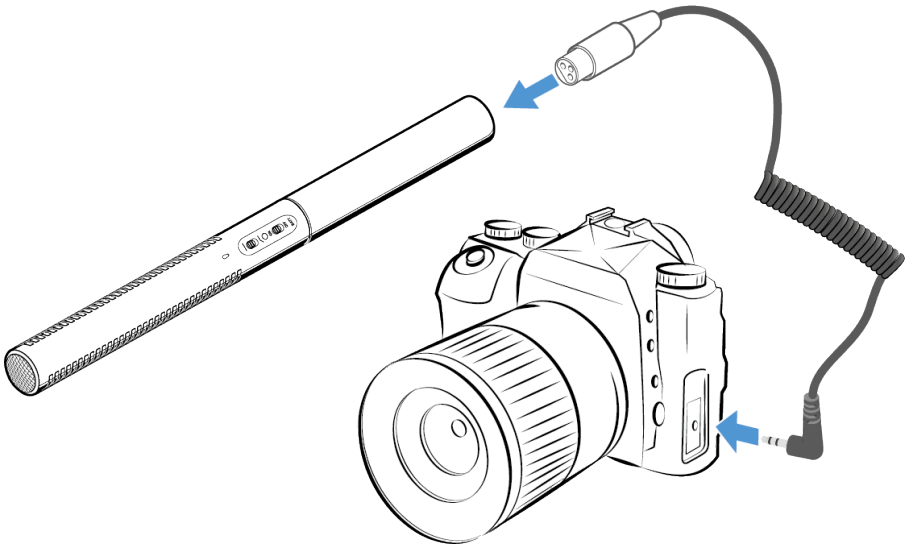

- Slide the microphone into the MZQ 600 stand clamp.
- Slide the stand clamp onto the camera.
- Tighten the stand clamp.

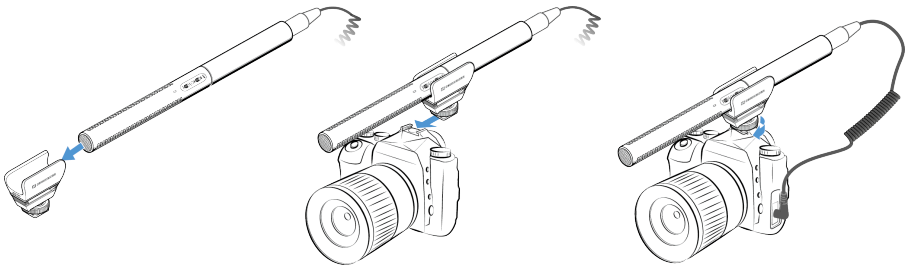

To use a windshield:

- Slide the windshield over the microphone.

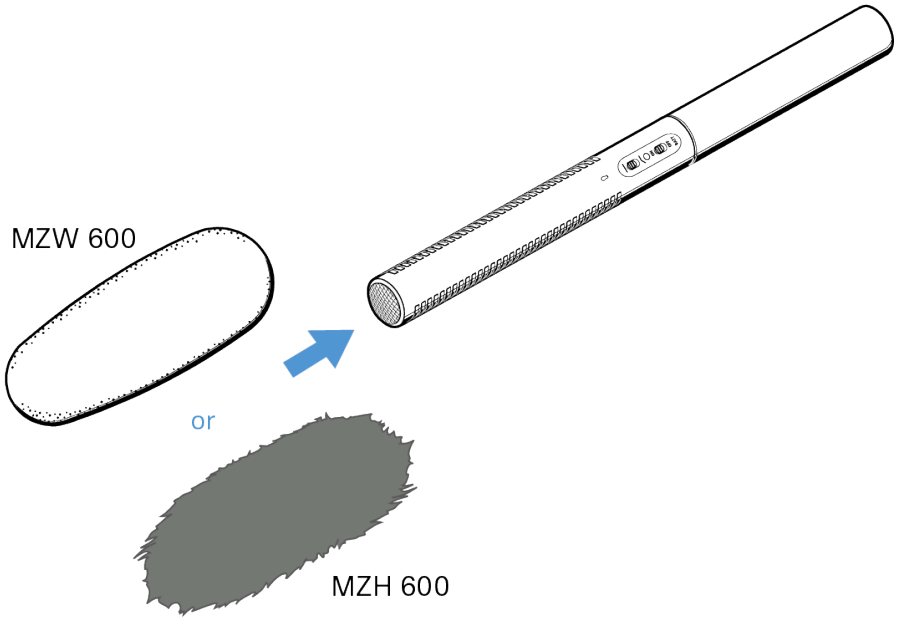

✓ The MZW 600 foam windshield reduces wind noise by approx. 25 dB.

Operation

Meaning of the LED

	LED	Internal battery power
< 1s	lights up red for approx. 1 second after switch-on and then goes off	switched on; operating time: up to approx. 150 h
	lights up red permanently	“Low Batt”, battery is almost empty; approx. 8 h of remaining operating time after initial display
1s	flashes briefly red on switch-on	battery is empty; the microphone is not operational

To switch the microphone on and off (only battery powering):

- Set the switch to the desired position.

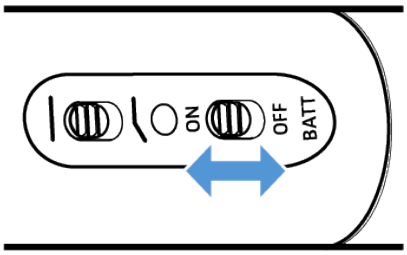

To use Low Cut:

- Set the **Low Cut** switch to the desired position.

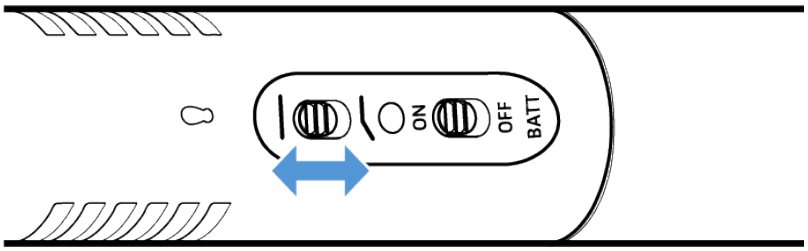

Switch position	Frequency response of the microphone
	linear frequency response
	frequencies below 100 Hz are attenuated to reduce wind and impact noise

Cleaning and maintenance

Note the following information when cleaning and maintaining the microphone.

NOTICE

Liquids can damage the electronics of the product

Liquids entering the product housing can cause a short-circuit and damage the electronics.

- Keep all liquids away from the products.
- Do not use any solvents or cleansing agents.
- Disconnect the mains-operated products from the power supply system and remove rechargeable batteries and batteries (if present) before you begin cleaning.
- Clean all products only with a soft, dry cloth.

4. Specifications

All specifications at a glance.

Technical specifications

Pick-up pattern

- super-cardioid/lobar

Frequency response

- 40 – 20.000 Hz

Sensitivity

- with P48 powering: 21 mV/Pa
- with battery powering: 19 mV/Pa

Max. SPL

- with P48 powering: 132 dB SPL
- with battery powering: 126 dB SPL

Equivalent noise level A-weighted

- with P48 powering: 15 dB (A)
- with battery powering: 16 dB (A)

Power supply

- 48 V ± 4 V (P48, IEC 61938) via XLR-3 or
- battery/rechargeable battery (AA size 1.5 V/1.2 V)

Current consumption

- with P48 powering: 4.4 mA

Operating time with battery

- approx. 150 h

“Low Batt” indicator

- < 1.05 V; approx. 8 h of remaining operating time after initial display

Operating temperature

- -10 °C to +60 °C

Diameter

- ⌀ 20 mm x 256 mm

Weight

- 128 g (without battery)

Polar diagram

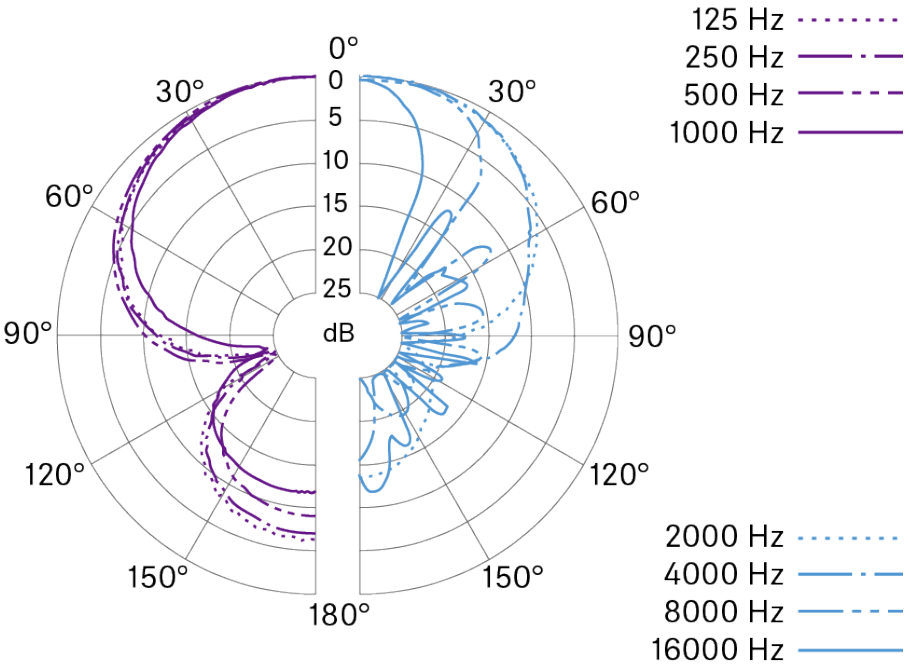

Frequency response curve

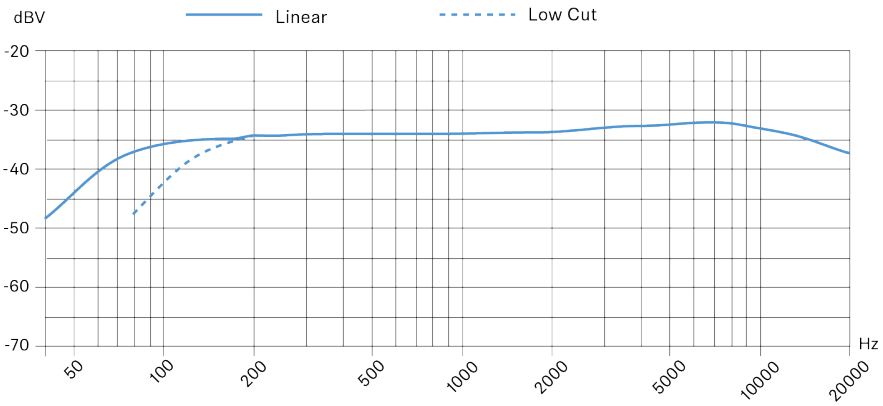

Sennheiser electronic SE & Co. KG | Am Labor 1 | 30900 Wedemark | Germany